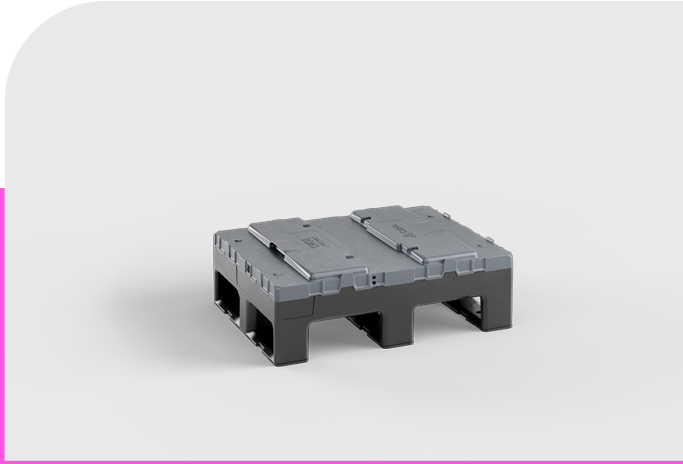

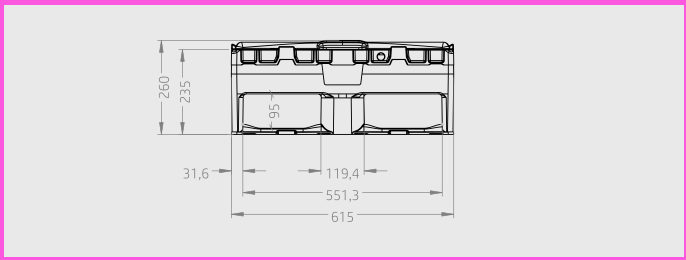

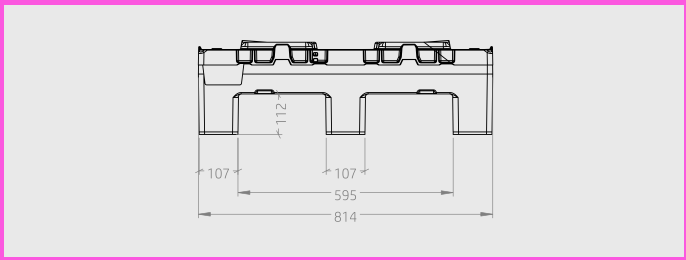

CabCube 8060

3 Runners Z folding

814 × 615 × 926 mm

Technical Data	Bottom support	External Dimensions (mm)	Internal Dimensions (mm)	Maximum Load Capacities (kg)			Weight (kg)
				Static	Dynamic	Racking	PP
CabCube 8060	3 runners	814 x 615 x 926	770 x 570 x 740	700	500	500	21,8

Benefits

1. Compatible with EURO dimensions
2. High load capacity
3. Sleeve retainer for base & Lid
4. Tamper proof evidence system installed
5. Lightweight lid with integrated handles
6. Optimized for automated warehouses. Closed runners, RFID ready

Options

1. Conductive / ESD
2. Fire retardant
3. Track & tracing (RFID, Barcode, Beacons...)
4. Customizable sleeve dimensions
5. Customizable sleeve design a
6. Grommets under the base
7. Closure profiles
8. Individual marking

Technical data are guideline values based on experience and tests according to ISO 13194 with evenly distributed loads at 23°C. The data may vary based on intended use, product features, raw materials used and environmental influences. Upon request our sales team will confirm the data required for your individual application.

CabCube 8060

3 Runners Z folding

814 x 615 x 746 mm

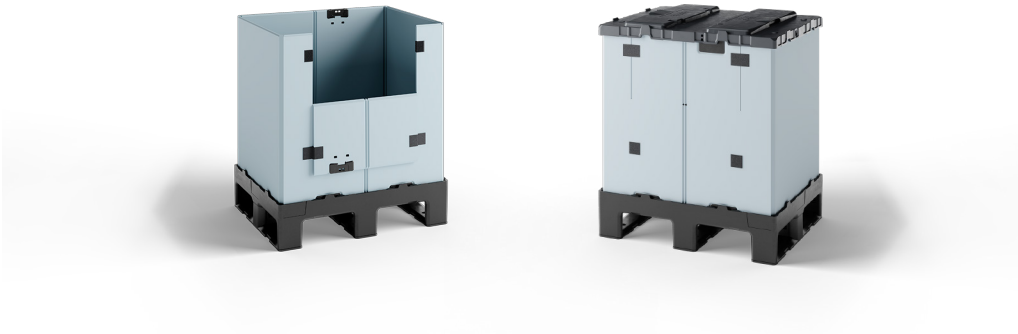

	Base	Sleeve (optional)	Lid
Weight	11,4 kg	6,5 kg	3,5 kg
Material	PE	PP (10 mm; 3000 g/m²)	PE
Dimensions	814 x 615 x 207 mm	790 × 590 × 770 mm	814 × 615 × 68 mm

Technical Data	CabCube 8060
Filling Volume	327 L
Height of folded box	260 mm
Nesting Space	25 mm
Total Weight	21,8 kg
Entries	4 way

Maximum Load Capacities	
Filling weight	500 kg
Stacking load	700 kg
Stacking factor	1+2
Dynamic load	500 kg
Racking load	500 kg

Stacking scenarios

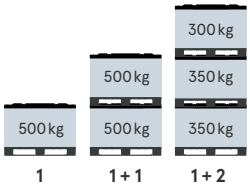

Return Ratio
1 : 4,4

Truck Loads	Mega Truck (13,6 x 2,48 x 3,0 m)	Standard Truck (13,6 x 2,48 x 2,7 m)
unfolded per stack	3	2
unfolded total	198	132
folded per stack	12	10
folded total	726	660
Return ratio	1 : 4,4	1 : 4,4
Volume reduction	77 %	77 %

Mega Truck utilization

198 full containers

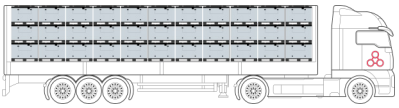

726 empty containers

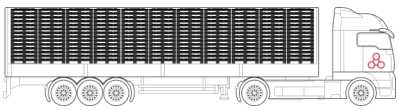

Standard Truck utilization

132 full containers

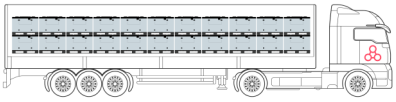

660 empty containers

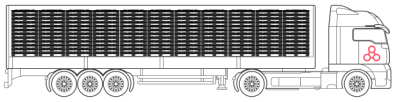

Technical data are guideline values based on experience and tests according to ISO 13194 with evenly distributed loads at 23°C. The data may vary based on intended use, product features, raw materials used and environmental influences. Upon request our sales team will confirm the data required for your individual application.